MODEL: AC470Y-B53s-8 18" BASS DRIVER-2000W

Description

The AC470Y-B53s is an Australian made professional low frequency 18" bass loudspeaker with a useful upper limit of 2.8kHz. This model has been designed for peak linear travel of 11.4mm and capable of 21mm before damage, therefore capable of producing extreme levels.
This model features rigid die cast aluminum frame and FE optimized magnet structure with in house CNC precision machined components.
High thermal rating is achieved with an inside outside 4" voice coil and high temperature materials, through pole and magnet cooling, optimized venting. The die-cast aluminum chassis also acts as a heat-sink conducting heat away from the magnet structure.
The ferrite magnet-assembly has been optimized for BL symmetry. The aluminum shorting ring reduces flux modulation, improves inductance linearity, lowering distortion and improving stability. The internal shorting ring also acts as a heat-sink conducting heat away from the voice-coil. Less wind noise is achieved with an undercut and flared vented pole piece. The machined components are finished in e-coat for superior corrosion resistance.
The stiff curvilinear paper cone is a product of our OFP technology and is made in-house from a blend of premium air dried wood pulp and Kevlar fibres. The curvilinear cone body was chosen for its superior radial stiffness, best choice for high acoustic load applications. This model employs two Aramid spiders separated with an aluminum spacer for improved stability and superior compliance linearity at large excursions. Aramid cloth was chosen for its strength rigidity and long term stability, the spider shape optimized for suspension symmetry and produced in house. The accordion cloth surround also made in house delivers extreme excursion with minimal distortion.
Efficient driver parameters have been selected to produce a full rich punchy bass in vented, band-pass and horn loaded enclosures. This model is an excellent choice for high acoustic loads.
The AC470Y model employs CNC machined magnet components and hand crafted to the highest and strictest tolerances to meet the demanding requirements of professional sound reinforcement applications.

Model	Impedance
AC470Y-B53s-4	4 ohm
AC470Y-B53s-8	8 ohm
AC470Y-B53s-16	16 ohm

This datasheet applies to our AC470Y-B53s-8 model.

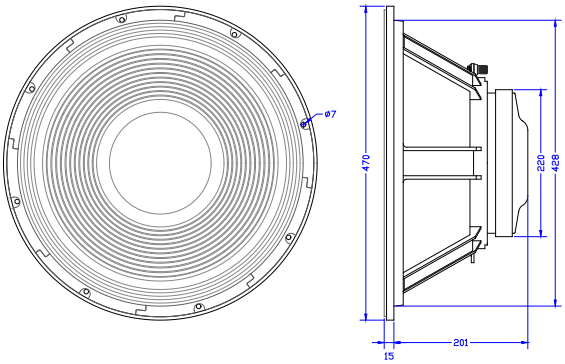

Mounting Details

Baffle opening diameter
- front mounting 430 mm
- rear mounting 430 mm

Mounting pattern:
- Eight 7.0 mm holes equi-spaced on a 444mm PCD.

Flange thickness 15 mm.

MODEL: AC470Y-B53s-8 18" BASS DRIVER-2000W

Technical Data

Typical measured Thiele/Small parameters:			
Maximum program power		=	2000 watt
AES power rating		=	1000 watt rms
Rated nominal impedance	Z	=	8 ohms
Rated frequency range		=	30 – 2800 Hz
Reference sensitivity SPLo		=	96.3 dBSPL
Resonance frequency		=	40 Hz
Mechanical Q	Qm	=	12.7
Electrical Q	Qe	=	0.36
Total spk. Q	Qts	=	0.34
Diaphragm mass	Mmd	=	190 gms
Effective diaphragm diameter	D	=	39.3 cm
Vol. equiv to spk compliance	Vas	=	155 litres
Mechanical compliance	Cms	=	73.0 mm/N
BL product	Bl	=	29.0 T.m.
Voicecoil diameter	d	=	100 mm
Voicecoil material		=	copper
Voicecoil DC resistance	Re	=	5.25 ohms
Voicecoil inductance @1Kz	Lvc	=	1.97 mH
Voicecoil height		=	30.0 mm
Height of air-gap	Hg	=	12 mm
Peak linear displacement	Xpk	=	11.4 mm
X Damage peak to peak	Xpk-pk	=	42 mm
Reference efficiency		=	2.67 %
Speaker total mass		=	12.8 kgm

Specifications subject to change without notice.

Notes

(1) AES power is determined according to AES2-1984 standard in free-air power computed relative to Zmin.
(2) Maximum recommended program power is twice AES power providing the safe excursion limits are not exceeded.
(3) Reference sensitivity is SPL at 1W at 1m derived from Thiele/Small parameters.
(4) Frequency range is the useful frequency range for this transducer when mounted in its recommended enclosure.
(5) Thiele/Small parameters are derived after the test speaker has been preconditioned and are a better representation of the long term parameters in use.
(6) Peak linear displacement Xpk derived from Klippel XBL measurement at 82%.

Frequency Response

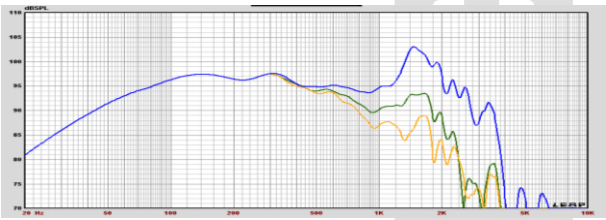

Infinite baffle sound pressure response recorded at 2.83V at one meter.

Blue curve is on axis spl response
Green curve SPL response 30° off axis.
Orange curve SPL response 40° off axis

Impedance plot

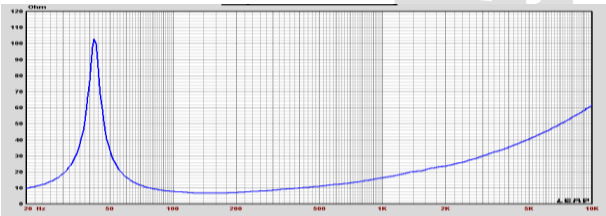

Free-air impedance magnitude plot.

12-4-2017